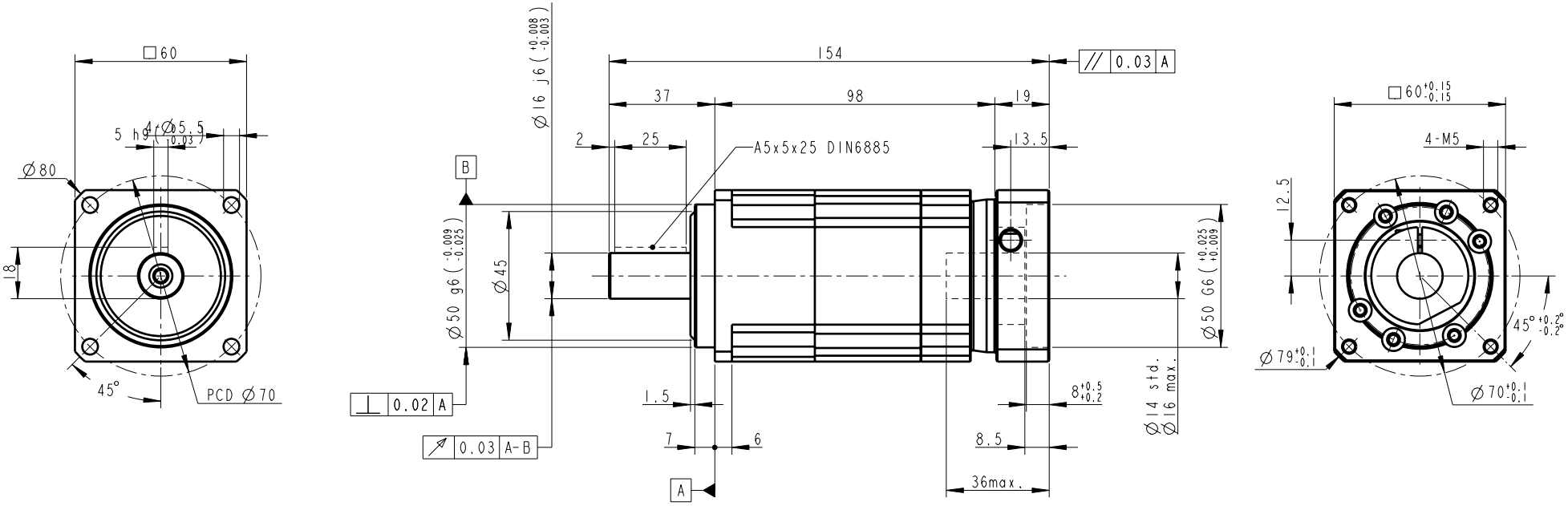

Old Part No.AB060A2-P4120403

INERTIA: 0.13~0.13kg-cm^2
MASS: 1.9kg

SHAFT OPTION S1: SMOOTH OUTPUT SHAFT(STANDARD)
SHAFT OPTION S2: OUTPUT SHAFT WITH KEYWAY
REDUCED BACKLASH<= 5 arcmin
STANDARD BACKLASH<= 7 arcmin

BUSHING SUPPLIED WHEN MOTOR SHAFT DIAMETER SMALL THAN ∅14

PART NO. AB060A2-P0403200503 AB060A-2, AD-P64-M60-3		APEX DYNAMICS, INC.
APPROVALS	DATE	TITLE AB060 2 STAGES, RATIO= 15~100 AND MOTOR FLANGE MOUNTING
DRAWN Cindy	12-Aug-08	DWG NO. AB060A2-P0403200503
CHECKED		
APPROVED		SIZE A2 / SCALE 1:1 / REV 2.0