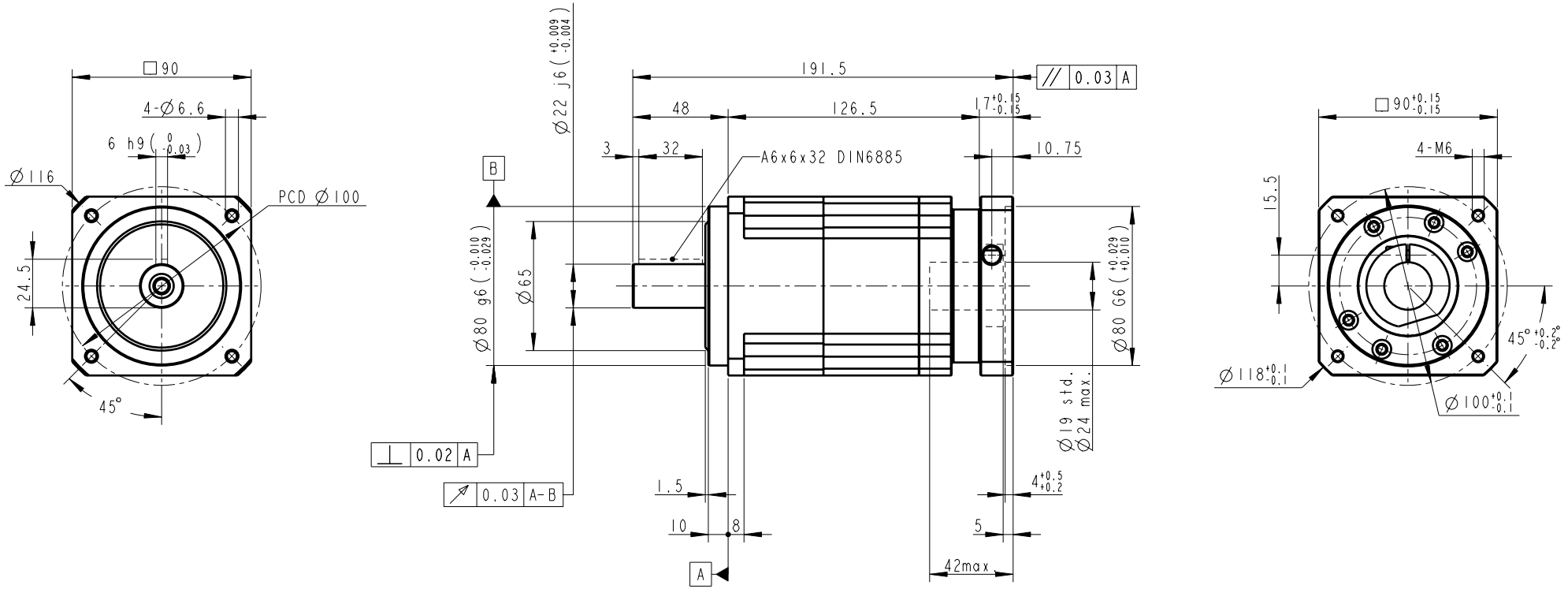

INERTIA: 0.44~0.47kg-cm^2
MASS: 5.3kg

SHAFT OPTION S1: SMOOTH OUTPUT SHAFT(STANDARD)
SHAFT OPTION S2: OUTPUT SHAFT WITH KEYWAY
REDUCED BACKLASH<= 5 arcmin
STANDARD BACKLASH<= 7 arcmin

BUSHING SUPPLIED WHEN MOTOR SHAFT DIAMETER SMALL THAN Ø24

Old Part No.AB090A2-P4130303

PART NO. AB090A2-P0403300603 AB090A-2, AD-P90-M90-3		APEX DYNAMICS, INC.
APPROVALS	DATE	TITLE AB090 2 STAGES, RATIO= 15~100 AND MOTOR FLANGE MOUNTING
DRAWN Cindy	14-Aug-08	
CHECKED		DWG NO. AB090A2-P0403300603
APPROVED		SIZE A1 / SCALE 1:1 / REV 2.0