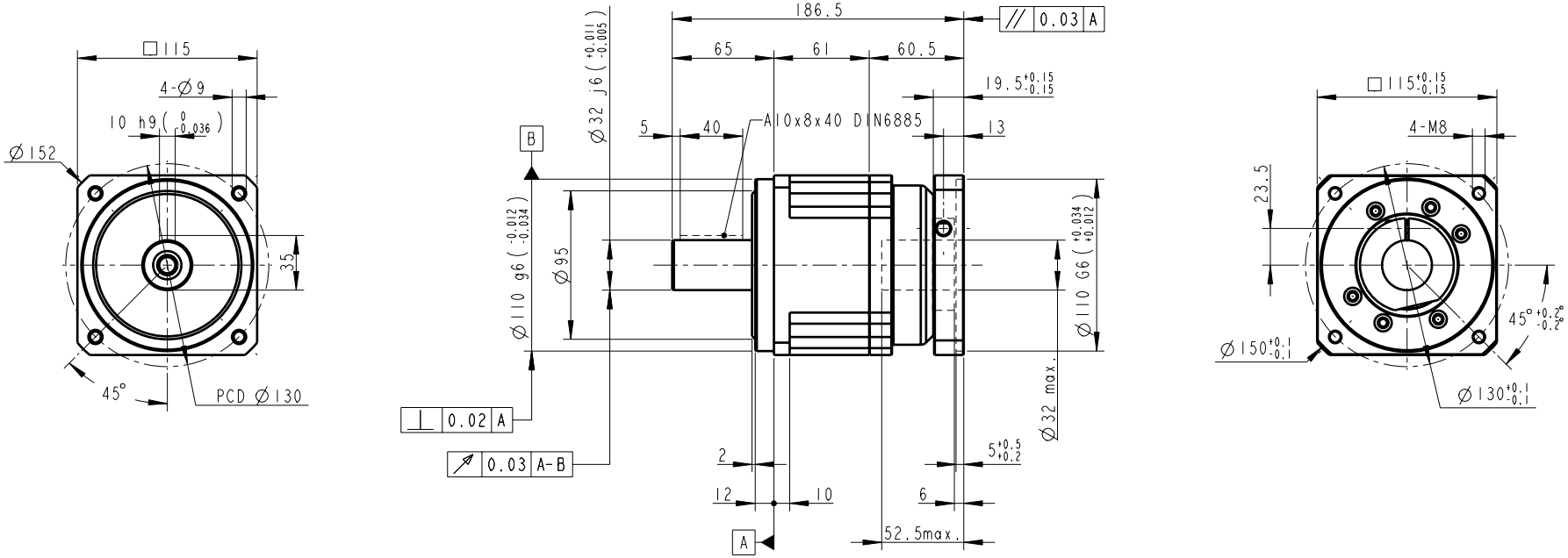

INERTIA: 2.57~3.25kg-cm^2
MASS: 7.8kg

SHAFT OPTION S1: SMOOTH OUTPUT SHAFT(STANDARD)
SHAFT OPTION S2: OUTPUT SHAFT WITH KEYWAY
MICRO BACKLASH<= 1 arcmin
REDUCED BACKLASH<= 3 arcmin
STANDARD BACKLASH<= 5 arcmin

BUSHING SUPPLIED WHEN MOTOR SHAFT DIAMETER SMALL THAN Ø32

Old Part No. AB115I-P4140301

PART NO. AB115I-P0403401001 AB115-1, AD-P110-M115-1		APEX DYNAMICS, INC.
APPROVALS	DATE	TITLE AB115 1 STAGE, RATIO= 3~10 AND MOTOR FLANGE MOUNTING
DRAWN Cindy	19-Feb-08	DWG NO. AB115I-P0403401001
CHECKED		
APPROVED		SIZE A0 / SCALE 1:1 / REV 2.0