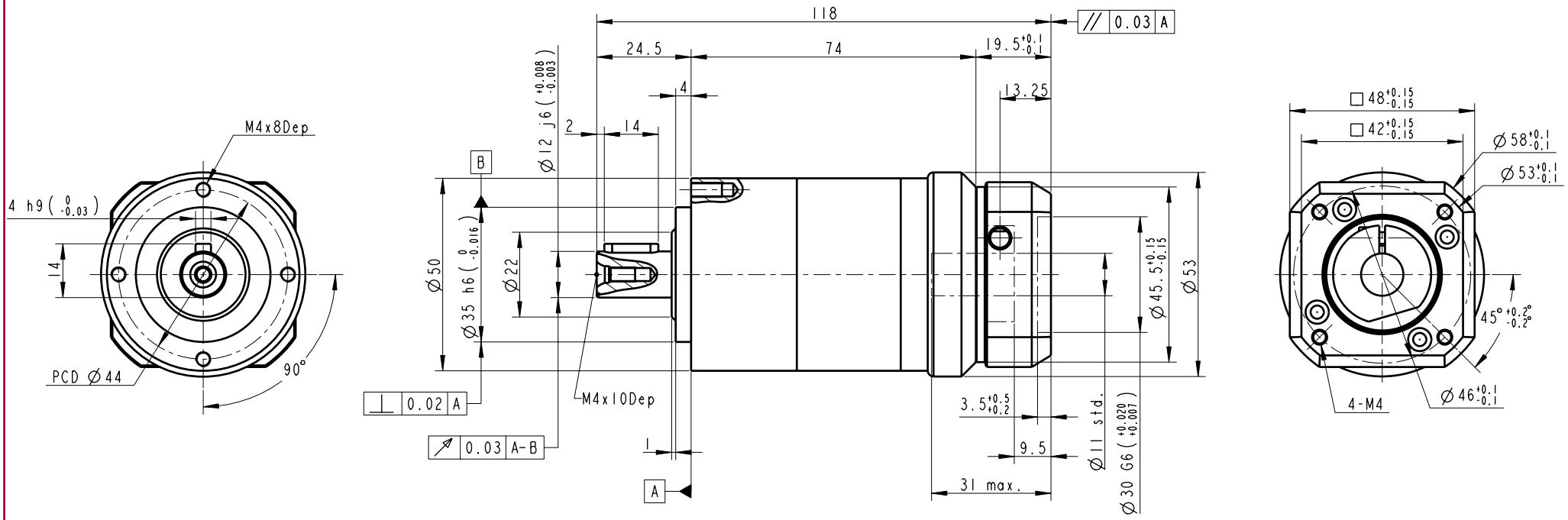

Old Part No. AE0502-P4110102

INERTIA: 0.03~0.03kg-cm^2
MASS: 0.9kg

BACKLASH: <=12 arcmin

BUSHING SUPPLIED WHEN MOTOR SHAFT DIAMETER SMALL THAN Ø11

PART NO. AE0502-P0403100302 AE090-2, AD-P47-M42-2		APEX DYNAMICS, INC.
APPROVALS	DATE	TITLE AE050 2 Stages, Ratio=15~100 AND MOTOR FLANGE MOUNTING
DRAWN Cindy	10-Sep-08	DWG NO. AE0502-P0403100302
CHECKED		
APPROVED		SIZE A3 / SCALE 1:1 / REV 1.0