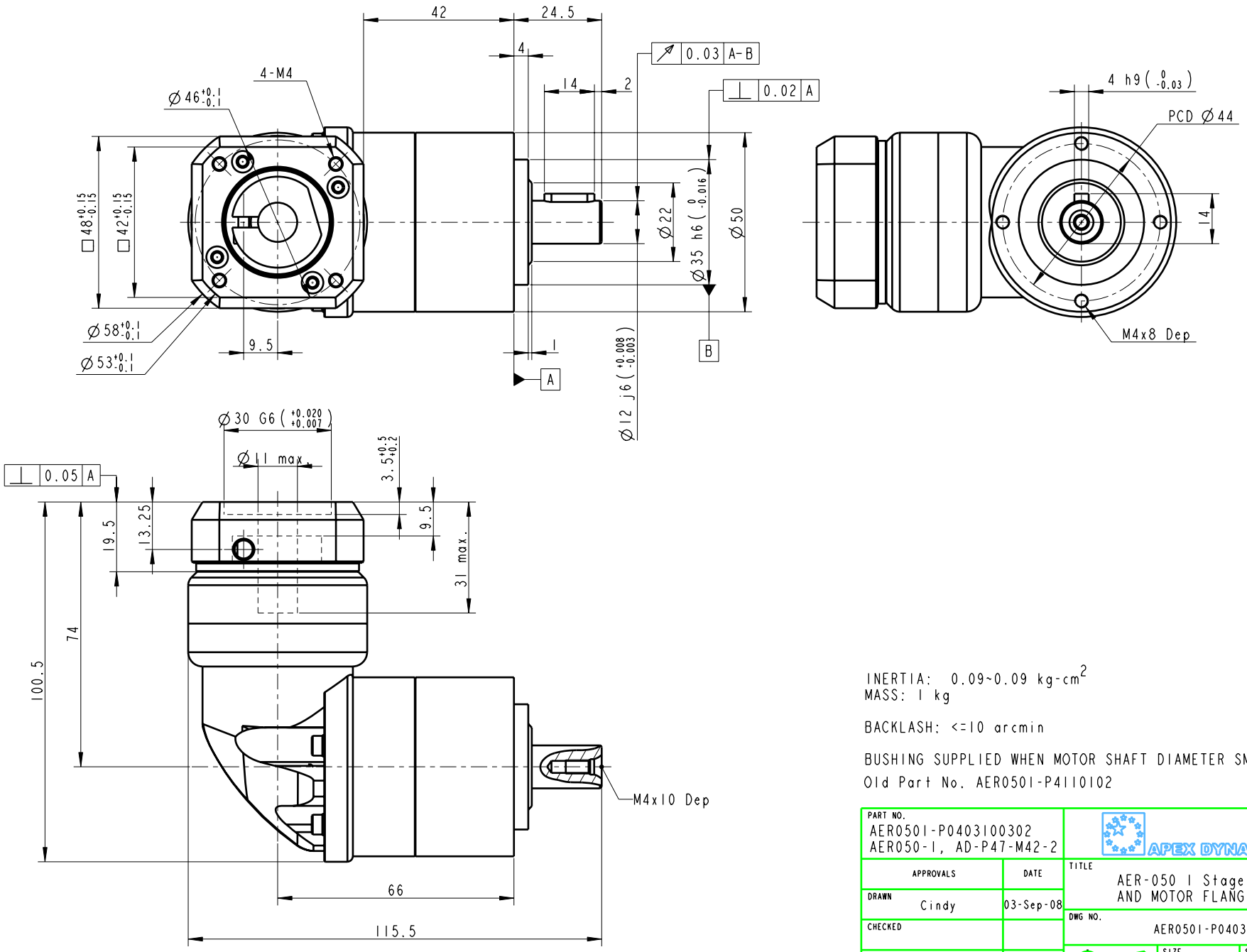


INERTIA: 0.09~0.09 kg-cm$^2$
MASS: 1 kg

BACKLASH: <=10 arcmin

BUSHING SUPPLIED WHEN MOTOR SHAFT DIAMETER SMALL THAN Ø11

Old Part No. AER0501-P4110102

| | | |
|---|---|---|
| PART NO. AER0501-P0403100302 AER050-1, AD-P47-M42-2 | | APEX DYNAMICS, INC. |
| APPROVALS | DATE | TITLE AER-050 1 Stage, Ratio=3~10 AND MOTOR FLANGE MOUNTING |
| DRAWN Cindy | 03-Sep-08 | DWG NO. AER0501-P0403100302 |
| CHECKED | | |
| APPROVED | | SIZE A3 / SCALE 1:1 / REV 1.0 |