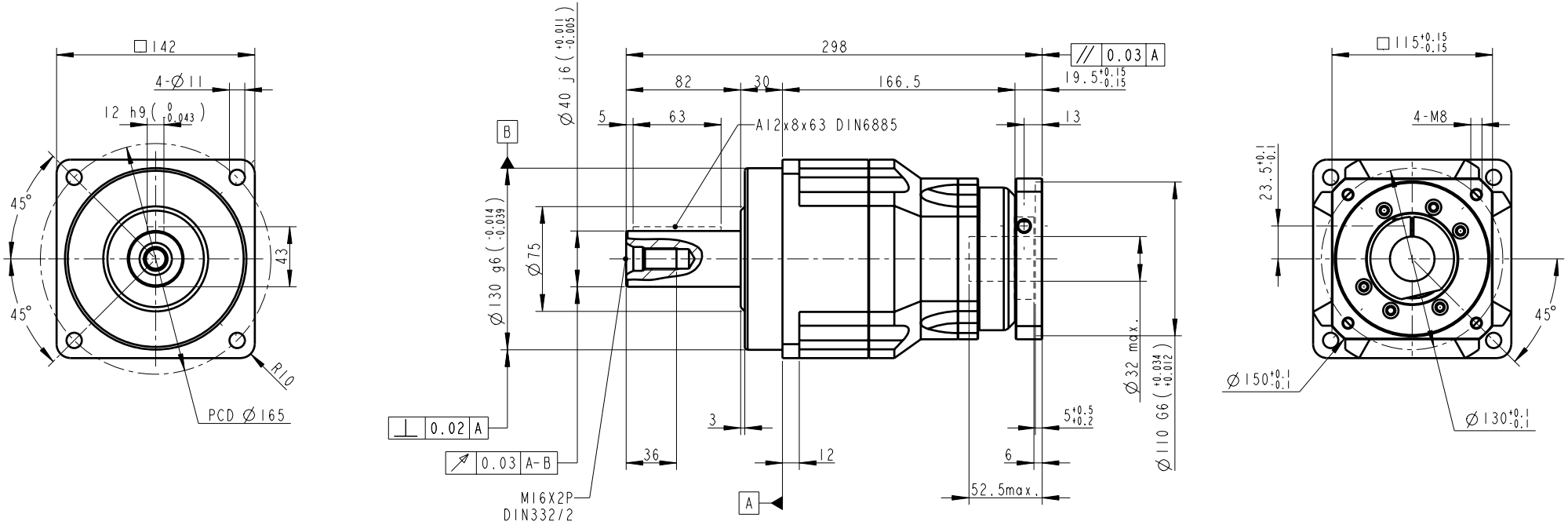

INERTIA: 2.57~2.71kg-cm^2
MASS: 16.6kg

SHAFT OPTION S1: SMOOTH OUTPUT SHAFT(STANDARD)
SHAFT OPTION S2: OUTPUT SHAFT WITH KEYWAY
MICRO BACKLASH<= 3arcmin
REDUCED BACKLASH<= 5arcmin
STANDARD BACKLASH<= 7arcmin

BUSHING SUPPLIED WHEN MOTOR SHAFT DIAMETER SMALL THAN Ø32

Old Part No. AF1402-P4140301

PART NO. AF1402-P0403401001 AF140-2, AD-P110-M115-1		APEX DYNAMICS, INC.
APPROVALS	DATE	TITLE AF140 2 STAGES, RATIO= 15~100 AND MOTOR FLANGE MOUNTING
DRAWN Cindy	19-Sep-08	DWG NO. AF1402-P0403401001
CHECKED		
APPROVED		SIZE A0 / SCALE 1:1 / REV 3.0